1976 TECHLIT CO.
PRINTED IN U.S.A.

INSTRUCTION SHEET
MIKUNI CARBURETOR—MODEL 18-32HHD
SUZUKI RE5 ROTARY

13410
50-851

GENERAL EXPLODED VIEW

THE GENERAL DESIGN AND PARTS SHOWN WILL VARY TO INDIVIDUAL UNITS COVERED ON THIS INSTRUCTION SHEET.

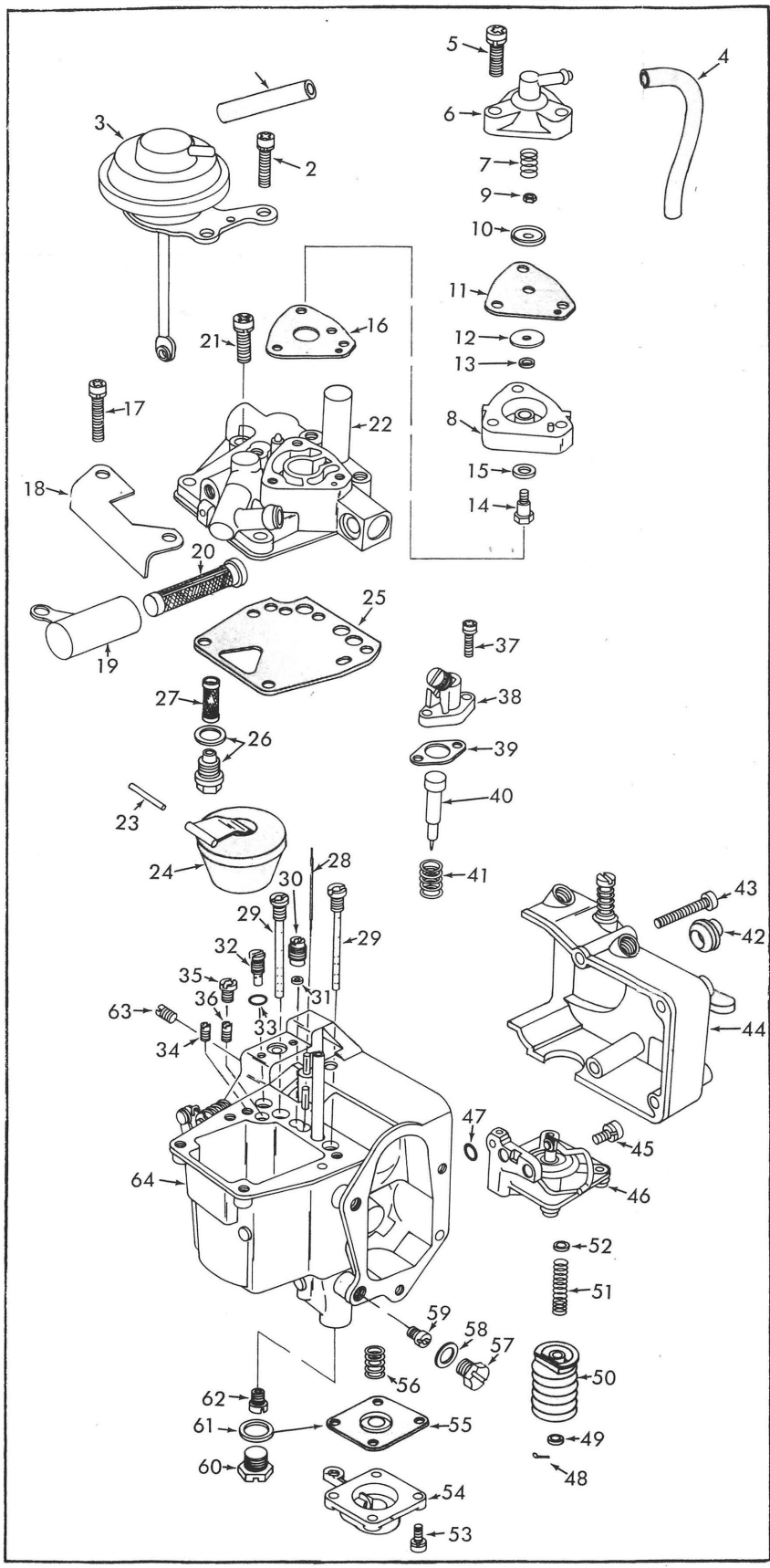

DISASSEMBLY

USE EXPLODED VIEW AS A GUIDE. THE NUMERICAL SEQUENCE MAY GENERALLY BE FOLLOWED TO DISASSEMBLE UNIT FAR ENOUGH TO PERMIT CLEANING AND INSPECTION. CARBURETOR COMPONENTS ARE MACHINED TO EXACTING SPECIFICATIONS AND MUST NOT BE TREATED ROUGHLY. RECORD SIZES OF JETS BELOW FOR PROPER REASSEMBLY.

NOMENCLATURE

REF. NO.	REF. NO.
1. HOSE- SECONDARY DIAPHRAGM	33. O-RING- PRI. PILOT JET
2. SCREW & LOCKWASHER (2)- SECONDARY DIAPHRAGM ASSY.	34. JET- PRIMARY PILOT AIR _____
3. SECONDARY DIAPHRAGM ASSY.	35. JET- SECONDARY PILOT AIR _____
4. HOSE- ENRICHMENT VALVE	36. JET- SECONDARY PILOT _____
5. SCREW & LOCKWASHER (3)- ENRICHMENT VALVE COVER	37. SCREW & LOCKWASHER (2)- PILOT SCREW ASSY.
6. COVER- ENRICHMENT VALVE	38. PILOT SCREW ASSY.
7. SPRING- ENRICHMENT DIAPHRAGM	39. GASKET- PILOT SCREW ASSY.
8. BODY- ENRICHMENT VALVE	40. NEEDLE- PILOT
9. NUT- VALVE STEM	41. SPRING- PILOT NEEDLE
10. WASHER- DIAPHRAGM	42. PLUG- SIDE COVER
11. DIAPHRAGM	43. SCREW (2)- CHOKE LEVER & COVER
12. WASHER- DIAPHRAGM	44. CHOKE LEVER & COVER ASSY.
13. WASHER- STEM (FIBER)	45. SCREW & LOCKWASHER (2)- CHOKE UNLOADER
14. STEM- VALVE	46. CHOKE UNLOADER & LINK ASSY.
15. SEAL- VALVE	47. O-RING- UNLOADER PASSAGE SEAL
16. GASKET- ENRICHMENT VALVE ASSY.	48. COTTER PIN- PUMP ROD
17. SCREW & LOCKWASHER (2)- COVER	49. WASHER- PUMP ROD
18. COVER- VENT	50. BOOT & GUIDE- PUMP ROD
19. COVER- AIR FILTER	51. SPRING- PUMP ROD
20. FILTER- AIR	52. WASHER- PUMP ROD
21. SCREW & LOCKWASHER (2)- BOWL COVER	53. SCREW & LOCKWASHER (4)- PUMP COVER
22. BOWL COVER ASSY.	54. PUMP COVER & LEVER ASSY.
23. PIN- FLOAT	55. DIAPHRAGM- PUMP
24. FLOAT ASSY.	56. SPRING- PUMP DIAPHRAGM
25. GASKET- BOWL COVER	57. PLUG- PRI. MAIN JET
26. NEEDLE, SEAT & GASKET ASSY.	58. GASKET- PLUG
27. SCREEN- FUEL FILTER	59. JET- PRIMARY MAIN _____
28. NEEDLE- PUMP NOZZLE	60. PLUG- SEC. MAIN JET
29. JET (2)- MAIN AIR BLEED _____	61. GASKET- PLUG
30. VALVE- PUMP CHECK	62. JET- SECONDARY MAIN _____
31. WASHER- PUMP CHECK VALVE SEAT	63. JET- VACUUM _____
32. JET- PRIMARY PILOT _____	64. MAIN BODY ASSY.

CLEANING

CLEANING MUST BE DONE WITH CARBURETOR DISASSEMBLED. SOAK PARTS LONG ENOUGH TO SOFTEN AND REMOVE ALL FOREIGN MATERIAL. USE A CARBURETOR CLEANING SOLVENT. RINSE OFF IN SUITABLE SOLVENT. BLOW OUT ALL PASSAGES IN CASTINGS WITH COMPRESSED AIR AND CHECK CAREFULLY TO INSURE THOROUGH CLEANING OF OBSCURE AREAS. CAUTION: DO NOT SOAK PARTS CONTAINING RUBBER OR PLASTIC MATERIALS.

REASSEMBLY

REASSEMBLE IN REVERSE ORDER OF DISASSEMBLY. NOTE SPECIAL INSTRUCTIONS AND ADJUSTMENTS.

SPECIAL INSTRUCTIONS

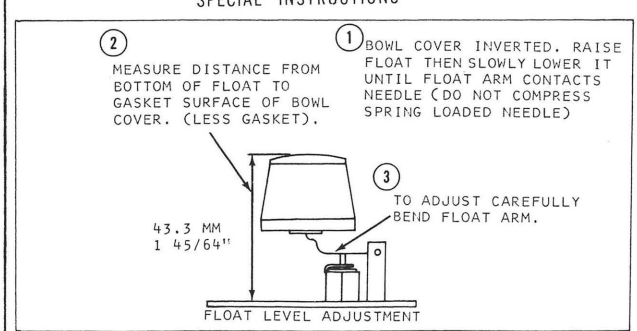

COMPLETE CARBURETOR ADJUSTMENT BY FOLLOWING OWNERS MANUAL.